EP50S Series

Diameter ϕ50mm Shaft type Absolute Rotary encoder

▣Features

- Compact size of external diameter ϕ50mm
- Various output code: BCD, Binary, Gray code(Customizable)
- Various and high resolution(720, 1024 divisions)
- Protection structure IP64(Dust-proof, Oil-proof)

▣Applications

Precision machine tool, Fabric machinery, Robot, Parking system

⚠ **Please read "Caution for your safety" in operation manual before using.**

CE

▣Ordering information

EP50S **8** – **1024** – **1** **R** – **P** – **24**

Series	Shaft diameter	Pulse/1Revolution	Output code	Revolution direction	Control output	Power supply
Diameter ϕ50mm shaft type	ϕ8mm	Refer to resolution	1 : BCD Code 2 : Binary Code 3 : Gray Code	F : Output value increase at CW direction R : Output value increase at CCW direction	P : PNP open collector output N : NPN open collector output	5 : 5VDC ±5% 24 : 12-24VDC ±5%

※Gray code is customizable.

▣Specifications

Item		Diameter ϕ50mm shaft type of absolute rotary encoder							
Resolution		**(Note1)** 6, 8, 10, 12, 16, 20, 24, 32, 40, 45, 48, 64, 90, 128, 180, 256, 360, 512, 720, 1024 division							
Electrical specification	Output code		BCD Code	Binary Code	Gray Code		BCD Code	Binary Code	Gray Code
	(Note2) Output phase / Output angle	1024 division	TS:0.3515°±15' (13bit)	TS:0.3515°±15' (10bit)	TS:0.703°±15' (10bit)	20 division	TP1:12°±60'(1bit) TP2:2°±60'(1bit) TS:18°±60'(5bit) EP:18°±60'(1bit)	TP1:12°±60'(1bit) TP2:2°±60'(1bit) TS:18°±60'(5bit) EP:18°±60'(1bit)	TP1:12°±60'(1bit) TP2:2°±60'(1bit) TS:36°±60'(5bit) EP:18°±60'(1bit)
		720 division	TS:0.5°±25' (11bit)	TS:0.5°±25' (10bit)	TS:1°±25' (10bit)				
		512 division	TS:0.703° ±15' (11bit)	TS:0.703°±15' (9bit)	TS:1.406°±15' (9bit)				
		360 division	TS:1°±25'(10bit)	TS:1°±25'(9bit)	TS:2°±25'(9bit)	16 division	TP1:15°±60'(1bit) TP2:2°±60'(1bit) TS:22.5°±60' (5bit) EP:22.5°±60' (1bit)	TP1:15°±60'(1bit) TP2:2°±60'(1bit) TS:22.5°±60' (4bit) EP:22.5°±60' (1bit)	TP1:15°±60'(1bit) TP2:2°±60'(1bit) TS:45°±60'(4bit) EP:22.5°±60' (1bit)
		256 division	TS:1.406°±15' (10bit)	TS:1.406°±15' (8bit)	TS:2.8125°±15' (8bit)				
		180 division	TS:2°±25'(9bit)	TS:2°±25'(8bit)	TS:4°±25'(8bit)				
		128 division	TS:2.8125°±15' (9bit)	TS:2.8125°±15' (7bit)	TS:5.625°±15' (7bit)				
		90 division	TS:4°±25'(8bit)	TS:4°±25'(7bit)	TS:8°±25'(7bit)	12 division	TP1:15°±60'(1bit) TP2:3°±60'(1bit) TS:30°±60'(5bit) EP:30°±60'(1bit)	TP1:15°±60'(1bit) TP2:3°±60'(1bit) TS:30°±60'(4bit) EP:30°±60'(1bit)	TP1:15°±60'(1bit) TP2:3°±60'(1bit) TS:60°±60'(4bit) EP:30°±60'(1bit)
		64 division	TS:5.625°±15' (7bit)	TS:5.625°±15' (6bit)	TS:11.25°±15' (6bit)				
		48 division	TS:7.5°±25'(7bit)	TS:7.5°±25'(6bit)	TS:15°±25'(6bit)				
		45 division	TS:8°±25'(7bit)	TS:8°±25'(6bit)	TS:16°±25'(6bit)				
		40 division	TP1:5°±60'(1bit) TP2:2°±60'(1bit) TS:9°±60'(6bit) EP:9°±60'(1bit)	TP1:5°±60'(1bit) TP2:2°±60'(1bit) TS:9°±60'(6bit) EP:9°±60'(1bit)	TP1:5°±60'(1bit) TP2:2°±60'(1bit) TS:18°±60'(6bit) EP:9°±60'(1bit)	10 division	TP1:30°±60'(1bit) TP2:12°±60'(1bit) TS:36°±60'(4bit) EP:36°±60'(1bit)	TP1:30°±60'(1bit) TP2:12°±60'(1bit) TS:36°±60'(4bit) EP:36°±60'(1bit)	TP1:30°±60'(1bit) TP2:12°±60'(1bit) TS:72°±60'(4bit) EP:36°±60'(1bit)
		32 division	TP1:7°±60'(1bit) TP2:2°±60'(1bit) TS:11.25°±60' (6bit) EP:11.25°±60' (1bit)	TP1:7°±60'(1bit) TP2:2°±60'(1bit) TS:11.25°±60' (5bit) EP:11.25°±60' (1bit)	TP1:7°±60'(1bit) TP2:2°±60'(1bit) TS:22.5°±60' (5bit) EP:11.25°±60' (1bit)	8 division	TP1:39°±60'(1bit) TP2:15°±60'(1bit) TS:45°±60'(3bit) EP:45°±60'(1bit)	TP1:39°±60'(1bit) TP2:15°±60'(1bit) TS:45°±60'(3bit) EP:45°±60'(1bit)	TP1:39°±60'(1bit) TP2:15°±60'(1bit) TS:90°±60'(3bit) EP:45°±60'(1bit)
		24 division	TP1:8°±60'(1bit) TP2:3°±60'(1bit) TS:15°±60'(6bit) EP:15°±60'(1bit)	TP1:8°±60'(1bit) TP2:3°±60'(1bit) TS:15°±60'(5bit) EP:15°±60'(1bit)	TP1:8°±60'(1bit) TP2:3°±60'(1bit) TS:30°±60'(5bit) EP:15°±60'(1bit)	6 division	TP1:53°±60'(1bit) TP2:15°±60'(1bit) TS:60°±60'(3bit) EP:60°±60'(1bit)	TP1:53°±60'(1bit) TP2:15°±60'(1bit) TS:60°±60'(3bit) EP:60°±60'(1bit)	TP1:53°±60'(1bit) TP2:15°±60'(1bit) TS:120°±60'(3bit) EP:60°±60'(1bit)
	Control output: PNP open collector output	Output voltage : Min. (Power supply-1.5)VDC, Load current : Max. 32mA							
	Control output: NPN open collector output	Load current : Max. 32mA, Residual voltage : Max. 1VDC							
	Response time(Rise/Fall)	Ton=800nsec, Toff=Max. 800nsec(Cable length : 2m, I sink=32mA)							
	Max. Response frequency	35kHz							
	Power supply	• 5VDC ±5%(Ripple P-P : Max. 5%) • 12-24VDC ±5%(Ripple P-P : Max. 5%)							
	Current consumption	Max. 100mA(disconnection of the load)							
	Insulation resistance	Min. 100MΩ(at 500VDC megger between all terminals and case)							
	Dielectric strength	750VAC 50/60Hz for 1 minute(Between all terminals and case)							
	Connection	Cable outgoing type(Cable gland)							

※**(Note1)**Not indicated type is customizable. ※**(Note2)**TS=Signal Pulse, Tp=Timing Pulse, EP=Even Parity

▣Specifications

Item		Diameter ϕ50mm shaft type of absolute rotary encoder
Mechanical specification	Starting torque	Max. 40gf · cm(0.004N · m)
	Moment of inertia	Max. 40g · cm²(4×10⁻⁶ kg · m²)
	Shaft loading	Radial : 10kgf, Thrust : 2.5kgf
	Max. allowable revolution	**(Note2)** 3000rpm
Vibration		1.5mm amplitude at frequency of 10 to 55Hz in each of X, Y, Z directions for 2 hours
Shock		Max. 50G
Ambient temperature		−10 to 70℃(at non−freezing status), Storage : −25 to 85℃
Ambient humidity		35 to 85%RH, Storage: 35 to 90%RH
Protection		IP64(IEC standard)
Cable		ϕ7mm, 15P, Length : 2m, Shield cable (AWG 28, Core wire diameter: 0.08mm, No. of core wire: 40, Insulator out diameter: 0.8mm)
Accessory		Fixing bracket, Coupling
Approval		CE
Unit weight		Approx. 380g

※**(Note3)** Max. allowable revolution ≥ Max. response revolution 【Max. response revolution(rpm) = $\frac{\text{Max. response frequency}}{\text{Resolution}}$ ×60 sec.】
Make sure that max. response revolution should be lower than max. allowable revolution when selecting the resolution.

▣Output waveform

●24 division (BCD CODE output)

Model: **EP50S8-24-1□-□-□**

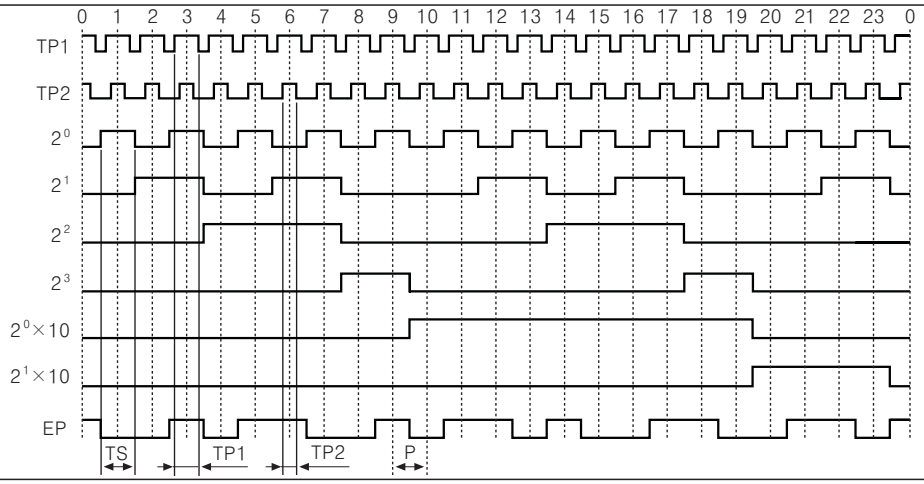

※TP1=8°±60', TP2=3°±60', TS=15°±60', P=15°±60'
※Above waveform is based on the positive logic. (The output waveform of negative logic is opposed to above waveform.)

●24 division (BINARY CODE output)

Model: **EP50S8-24-2□-□-□**

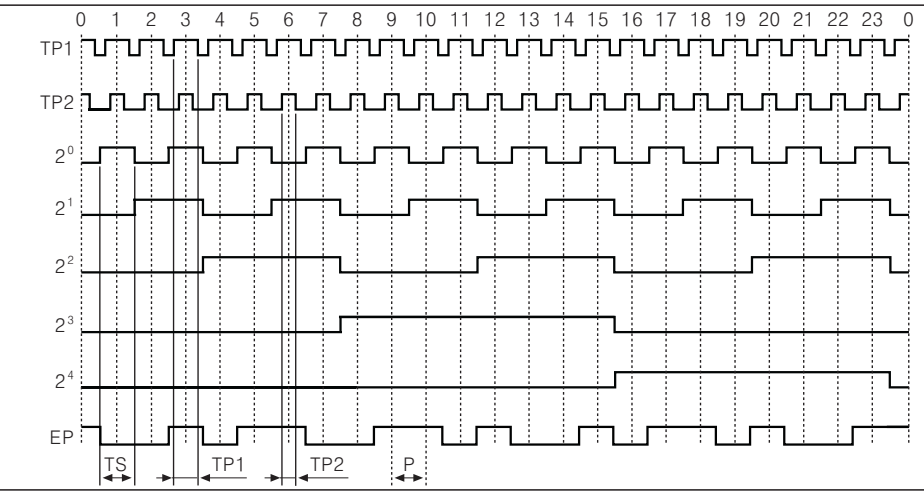

※TP1=8°±60', TP2=3°±60', TS=15°±60', P=15°±60'
※Above waveform is based on the positive logic. (The output waveform of negative logic is opposed to above waveform.)

▣Output waveform

●360 division (BCD CODE output)

Model	EP50S8-360-1□-P-□

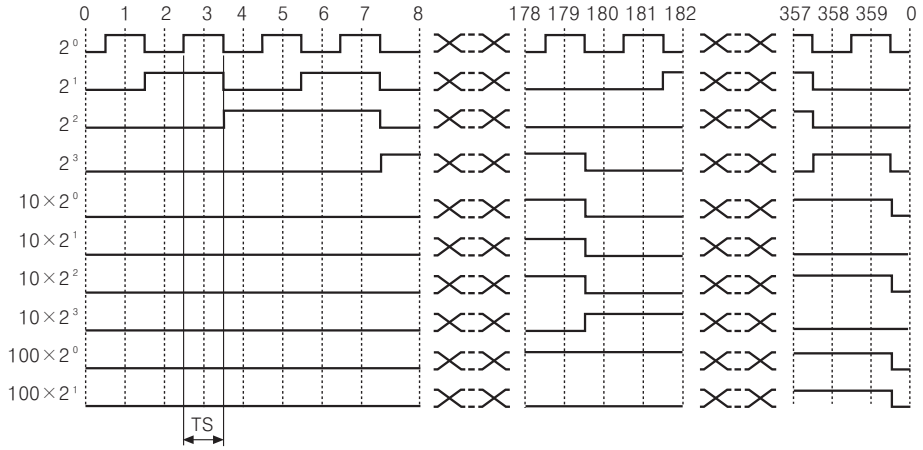

※TS=1°±25'
※(Note)Above waveform is based on the positive logic. (The output waveform of negative logic is opposite to the above waveform.)

●360 division (BINARY CODE output)

Model	EP50S8-360-2□-P-□

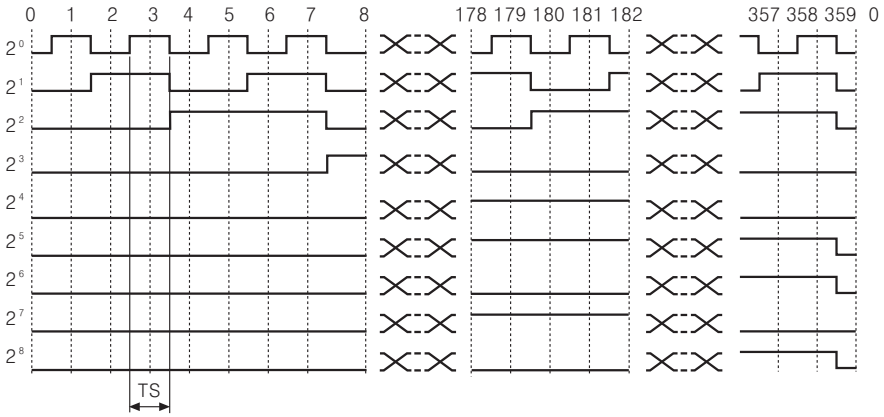

※TS=1°±25'
※(Note)Above waveform is based on the positive logic. (The output waveform of negative logic is opposite to the above waveform.)

●1024 division (BCD CODE output)

Model	EP50S8-1024-1□-P-□

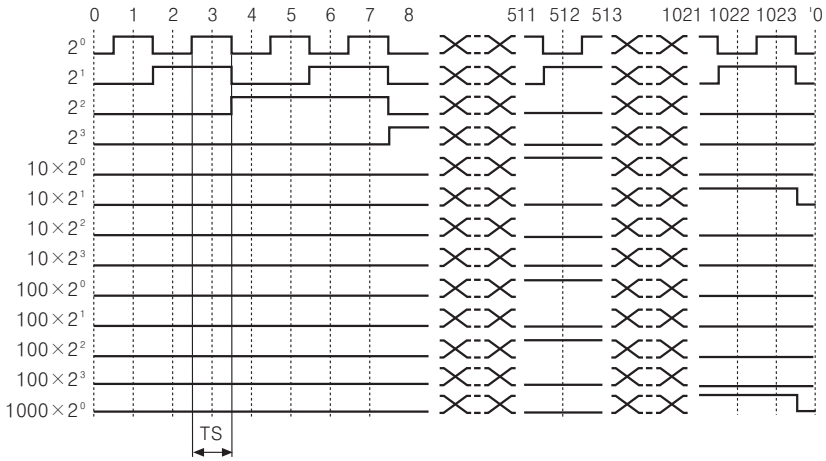

※TS=0.3515°±15'
※(Note)Above waveform is based on the positive logic. (The output waveform of negative logic is opposite to the above waveform.)

■Output waveform

●1024 division (BINARY CODE output)

Model	EP50S8-1024-2□-P-□

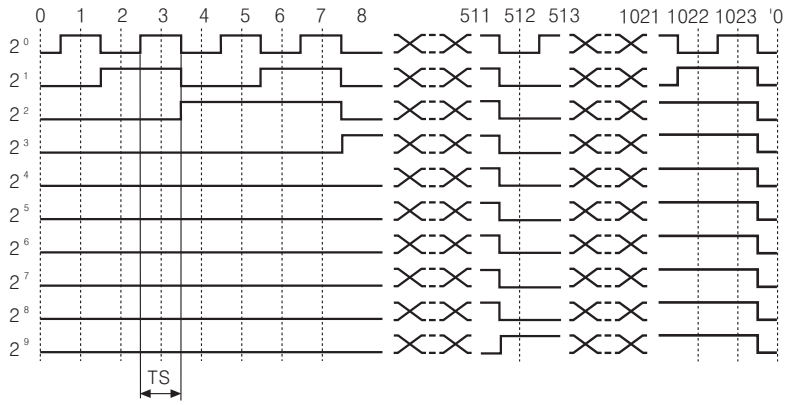

※TS=0.3515° ±15'
※(Note)Above waveform is based on the positive logic. (The output waveform of negative logic is opposite to the above waveform.)

■Control output diagram

PNP open collector output		NPN open collector output	
Rotary encoder circuit	Connection	Rotary encoder circuit	Connection

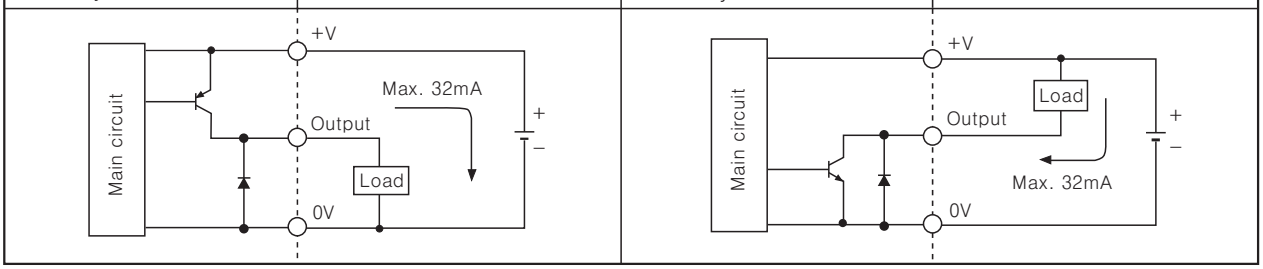

※Output circuits of all phases are the same.

■Connections

●BCD Code

Color \ Resolution		6 division	8 division	10 division	12 division	16 division	20 division	24 division	32 division	40 division	45 division	48 division	64 division	90 division	128 division	180 division	256 division	360 division	512 division	720 division	1024 division
Power	White	+V																			
Power	Boack	0V																			
Outpur wire	Brown	2^0																			
Outpur wire	Red	2^1																			
Outpur wire	Orange	2^2																			
Outpur wire	Yellow	N.C.		2^3																	
Outpur wire	Blue	N.C.			$2^0\times10$																
Outpur wire	Purple	N.C.					$2^1\times10$														
Outpur wire	Gray	N.C.								$2^2\times10$											
Outpur wire	White/Brown	TP1									N.C.			$2^3\times10$							
Outpur wire	White/Red	TP2									N.C.				$2^0\times100$						
Outpur wire	White/Orange	EP									N.C.					$2^1\times100$					
Outpur wire	White/Yellow	N.C.																	$2^2\times100$		
Outpur wire	White/Blue	N.C.																			$2^3\times100$
Outpur wire	White/Purple	N.C.																			$2^0\times1000$
Outpur wire	Shield wire	F.G.																			

※Unused wires must be insulated.
※Encoder case and shield wire must be grounded(F.G.).
※N.C.: Not Connected.
※Output cable must not be short-circuited, because Driver IC is used in output circuit.

▣Connections

●Binary code/Gray code

Color \ Resolution		6 division	8 division	10 division	12 division	16 division	20 division	24 division	32 division	40 division	45 division	48 division	64 division	90 division	128 division	180 division	256 division	360 division	512 division	720 division	1024 division
Power	White	+V																			
Power	Black	0V																			
Outpur wire	Brown	2^0																			
Outpur wire	Red	2^1																			
Outpur wire	Orange	2^2																			
Outpur wire	Yellow	N.C.		2^3																	
Outpur wire	Blue	N.C.					2^4														
Outpur wire	Purple	N.C.								2^5											
Outpur wire	Gray	N.C.												2^6							
Outpur wire	White/Brown	TP1									N.C.					2^7					
Outpur wire	White/Red	TP2									N.C.							2^8			
Outpur wire	White/Orange	EP									N.C.									2^9	
Outpur wire	Shield wire	F.G.																			

※Unused wires must be insulated.
※Encoder case and shield wire must be grounded(F.G.).
※N.C.: Not Connected.
※Output cable must not be short-circuited, because Driver IC is used in output circuit.

▣Dimensions

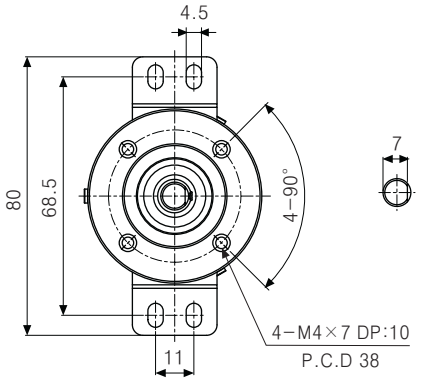

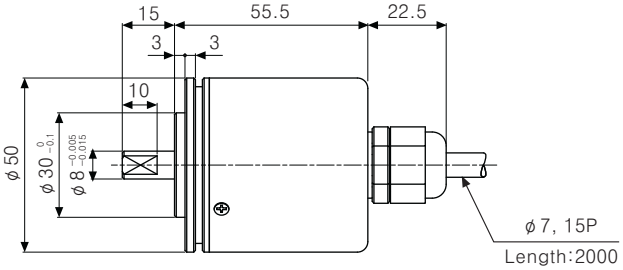

●Bracket

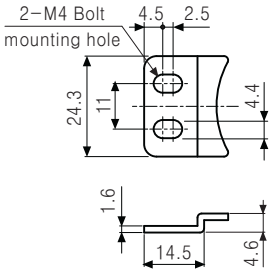

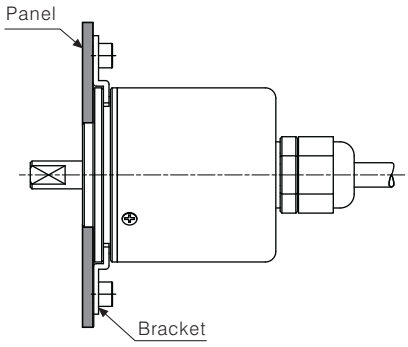

●Coupling(EP50S)

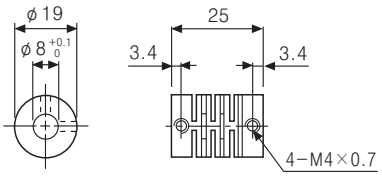

(Unit:mm)